版本	A		B	
	C		D	

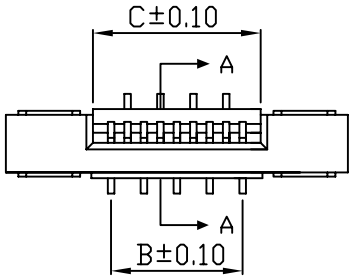

NOTE:

1.MATERIAL:
HOUSING:NYLON UL 94V-0
CONTACT: BRASS
PLATING:TIN
TEMPERATURE:-20°C TO+85°C
2.SPECIFICATION:
SIZE:4 TO 60 CIRCUITS
FOR 0.5mmTHICK FFC/FPC.
VOLTAGE:50V
CURRENT:0.5A
CONTACT RESISTANCE:20m Ω MAX.
DIELECTRICWITHSTANDING VOLTAGE:250V AC.

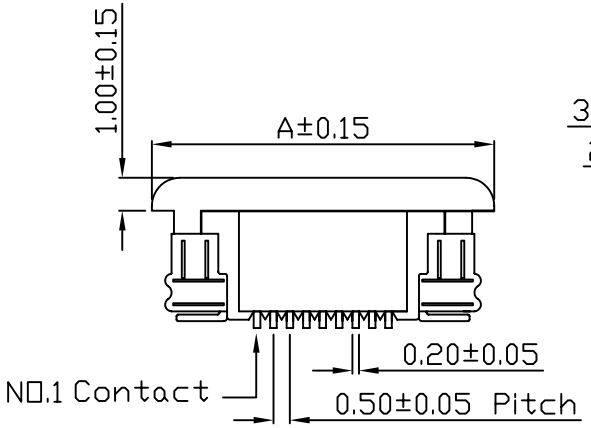

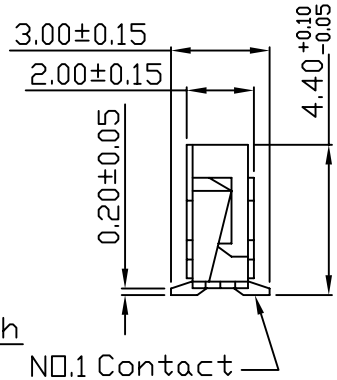

A-A 向

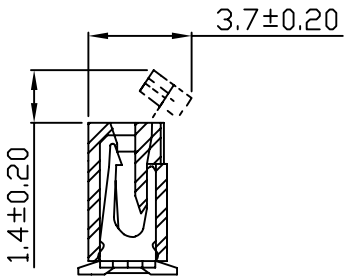

SECTION A-A

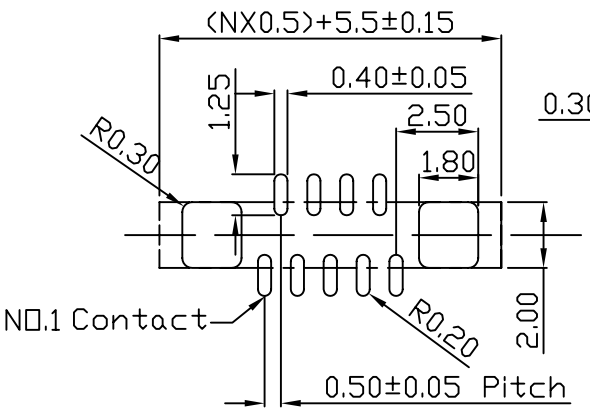

PCB layout

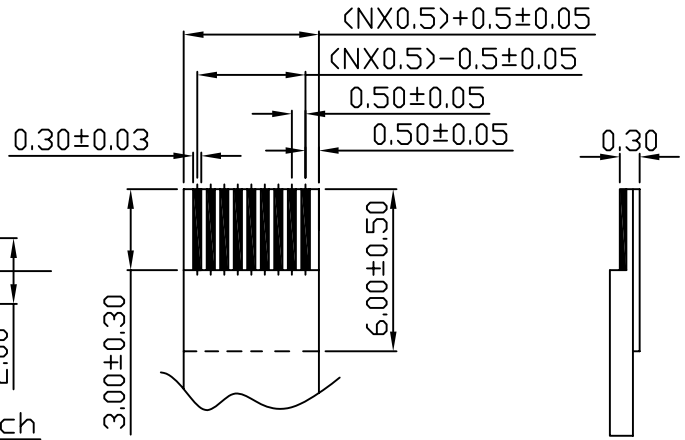

適用FFC/FPC
APPLICABLE FFC/FPC

DIMENSIONS(mm)

CKT.	Catalog Number	A	B	C	CKT.	Catalog Number	A	B	C
04	FC204-04	7.90	1.50	2.50	33	FC204-33	22.40	16.00	17.00
05	FC204-05	8.40	2.00	3.00	34	FC204-34	22.90	16.50	17.50
06	FC204-06	8.90	2.50	3.50	35	FC204-35	23.40	17.00	18.00
07	FC204-07	9.40	3.00	4.00	36	FC204-36	23.90	17.50	18.50
08	FC204-08	9.90	3.50	4.50	37	FC204-37	24.40	18.00	19.00
09	FC204-09	10.40	4.00	5.00	38	FC204-38	24.90	18.50	19.50
10	FC204-10	10.90	4.50	5.50	39	FC204-39	25.40	19.00	20.00
11	FC204-11	11.40	5.00	6.00	40	FC204-40	25.90	19.50	20.50
12	FC204-12	11.90	5.50	6.50	41	FC204-41	26.40	20.00	21.00
13	FC204-13	12.40	6.00	7.00	42	FC204-42	26.90	20.50	21.50
14	FC204-14	12.90	6.50	7.50	43	FC204-43	27.40	21.00	22.00
15	FC204-15	13.40	7.00	8.00	44	FC204-44	27.90	21.50	22.50
16	FC204-16	13.90	7.50	8.50	45	FC204-45	28.40	22.00	23.00
17	FC204-17	14.40	8.00	9.00	46	FC204-46	28.90	22.50	23.50
18	FC204-18	14.90	8.50	9.50	47	FC204-47	29.40	23.00	24.00
19	FC204-19	15.40	9.00	10.00	48	FC204-48	29.90	23.50	24.50
20	FC204-20	15.90	9.50	10.50	49	FC204-49	30.40	24.00	25.00
21	FC204-21	16.40	10.00	11.00	50	FC204-50	30.90	24.50	25.50
22	FC204-22	16.90	10.50	11.50	51	FC204-51	31.40	25.00	26.00
23	FC204-23	17.40	11.00	12.00	52	FC204-52	31.90	25.50	26.50
24	FC204-24	17.90	11.50	12.50	53	FC204-53	32.40	26.00	27.00
25	FC204-25	18.40	12.00	13.00	54	FC204-54	32.90	26.50	27.50
26	FC204-26	18.90	12.50	13.50	55	FC204-55	33.40	27.00	28.00
27	FC204-27	19.40	13.00	14.00	56	FC204-56	33.90	27.50	28.50
28	FC204-28	19.90	13.50	14.50	57	FC204-57	34.40	28.00	29.00
29	FC204-29	20.40	14.00	15.00	58	FC204-58	34.90	28.50	29.50
30	FC204-30	20.90	14.50	15.50	59	FC204-59	35.40	29.00	30.00
31	FC204-31	21.40	15.00	16.00	60	FC204-60	35.90	29.50	30.50
32	FC204-32	21.90	15.50	16.50					

TOLERANCE UNLESS SPECIFIED		REV	E	DR. BY	胡三保	MATERIAL	
LINEAR	ANGLE	SHEET				FINISH	
.X (±0.1)	X° (±1°)	SCALE	5:1	CHK. BY		DATE	2008-11-20
.XX (±0.05)	.X° (±0.1°)						
.XXX (±0.005)	.XX° (±0.01°)	UNIT	mm	APP. BY		PART NO	FC204-XX

QT 坤特股份有限公司 QUEENTECH ELECTRONIC CO.,LTD

TITLE: P=0.5mm FFC/FPC CONNECTOR

DWG NO.